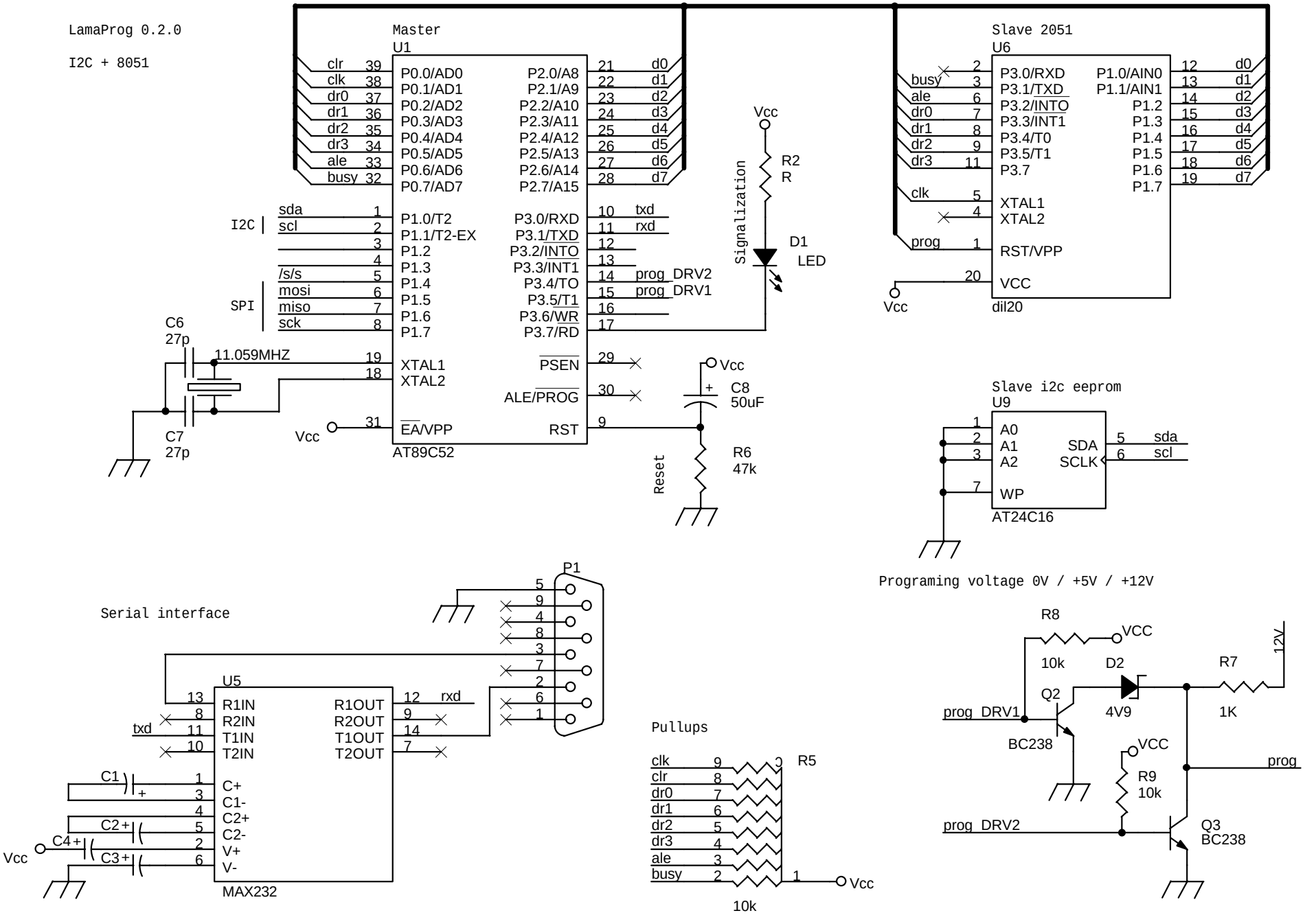
LamaProg 0.2.0
I2C + 8051
Master
U1
clr 39
clk 38
dr0 37
dr1 36
dr2 35
dr3 34
ale 33
busy 32
P0.0/AD0
P0.1/AD1
P0.2/AD2
P0.3/AD3
P0.4/AD4
P0.5/AD5
P0.6/AD6
P0.7/AD7
P2.0/A8 21 d0
P2.1/A9 22 d1
P2.2/A10 23 d2
P2.3/A11 24 d3
P2.4/A12 25 d4
P2.5/A13 26 d5
P2.6/A14 27 d6
P2.7/A15 28 d7
I2C
sda 1
scl 2
P1.0/T2
P1.1/T2-EX
P1.2
P1.3
/s/s 5
mosi 6
miso 7
sck 8
SPI
P1.4
P1.5
P1.6
P1.7
P3.0/RXD 10 txd
P3.1/TXD 11 rxd
P3.2/INTO 12
P3.3/INT1 13
P3.4/TO 14 prog_DRV2
P3.5/T1 15 prog_DRV1
P3.6/WR 16
P3.7/RD 17
C6
27p
11.059MHZ
19 XTAL1
18 XTAL2
C7
27p
Vcc 31 EA/VPP
PSEN 29
ALE/PROG 30
RST 9
AT89C52
Vcc
R2
R
Signalization
D1
LED
Vcc
C8
50uF
R6
47k
Reset
Slave 2051
U6
busy 2
ale 3
dr0 6
dr1 7
dr2 8
dr3 9
clk 11
prog 5
4
1
20
P3.0/RXD
P3.1/TXD
P3.2/INTO
P3.3/INT1
P3.4/T0
P3.5/T1
P3.7
XTAL1
XTAL2
RST/VPP
VCC
P1.0/AIN0 12 d0
P1.1/AIN1 13 d1
P1.2 14 d2
P1.3 15 d3
P1.4 16 d4
P1.5 17 d5
P1.6 18 d6
P1.7 19 d7
Vcc
dil20
Slave i2c eeprom
U9
1 A0
2 A1
3 A2
7 WP
SDA 5 sda
SCLK 6 scl
AT24C16
Programing voltage 0V / +5V / +12V
Serial interface
P1
5
9
4
8
3
7
2
6
1
U5
13 R1IN
8 R2IN
11 T1IN
10 T2IN
R1OUT 12 rxd
R2OUT 9
T1OUT 14
T2OUT 7
txd
C1
1 C+
3 C1-
4 C2+
5 C2-
2 V+
6 V-
C2+
C4+
C3+
Vcc
MAX232
Pullups
clk 9
clr 8
dr0 7
dr1 6
dr2 5
dr3 4
ale 3
busy 2
R5
1
Vcc
10k
R8
VCC
10k
D2
4V9
R7
1K
12V
Q2
BC238
prog_DRV1
VCC
R9
10k
prog
prog_DRV2
Q3
BC238